ECT
Engineering College of Technology.

Basics of SCADA and PLC Systems

Monday 19 October 2026

Watch Webinar Recording Here

Dr. Abdu Shaalan
Industrial Automation Programme leader



UKPRN: 10089771

About ECT

We are dedicated to ensuring that you receive a world-class education and gain skills that you can immediately apply in the workforce.



Engineering Specialists

ECT - affiliated to the well-established Engineering Institute of Technology (EIT) - is an engineering education specialist. ECT delivers bachelor's and master's degrees.



Industry-Driven Programs

Our programs are designed by industry experts, ensuring you graduate with cutting-edge skills that are valued by employers. Our program content remains current with rapidly changing technology and industry developments.



UK Recognised Education

ECT is OfS registered and accredited, meeting the Office for Students' requirements for course quality, academic standards, student support and student protection.



Lecturers and Instructors

Our teachers are subject specialists with industry experience and the requisite academic qualifications. The online platform allows ECT to source them from a large, global pool of expertise.



Unique Delivery Model

We deliver our programmes via a unique delivery methodology that makes use of live and interactive tutorials, an international pool of expert lecturers, dedicated learning support officers, hands-on workshops and state-of-the-art remote labs connected to real equipment, and simulation software.

UKPRN: 10089771

Introduction – Presenter

Dr. Abdu Shaalan



- Abdu is a PhD holder in the fields of Industrial Automation and Advanced Maintenance practices from the University of Sunderland.
- He is a research enthusiast and has held multiple research projects over the years, including a research fellowship with the nursing school, several KTP projects with local manufacturers, and was recently awarded a Teaching Fellowship in AI in Education.
- Abdu's research focus is on Industrial Automation and Advanced Maintenance practices in the advances of Industry 4.0 technologies.
- Teaching-wise, Abdu held multiple programme lead positions ranging from Undergraduate and Postgraduate levels.
- Currently a programme leader for Undergraduate and Postgraduate Industrial Automation programmes at ECT.

Agenda

1	History of Industrial Automation
2	Impact of Industrial Automation
3	How an Automated system works
4	Codesys programming



History of PLC’s

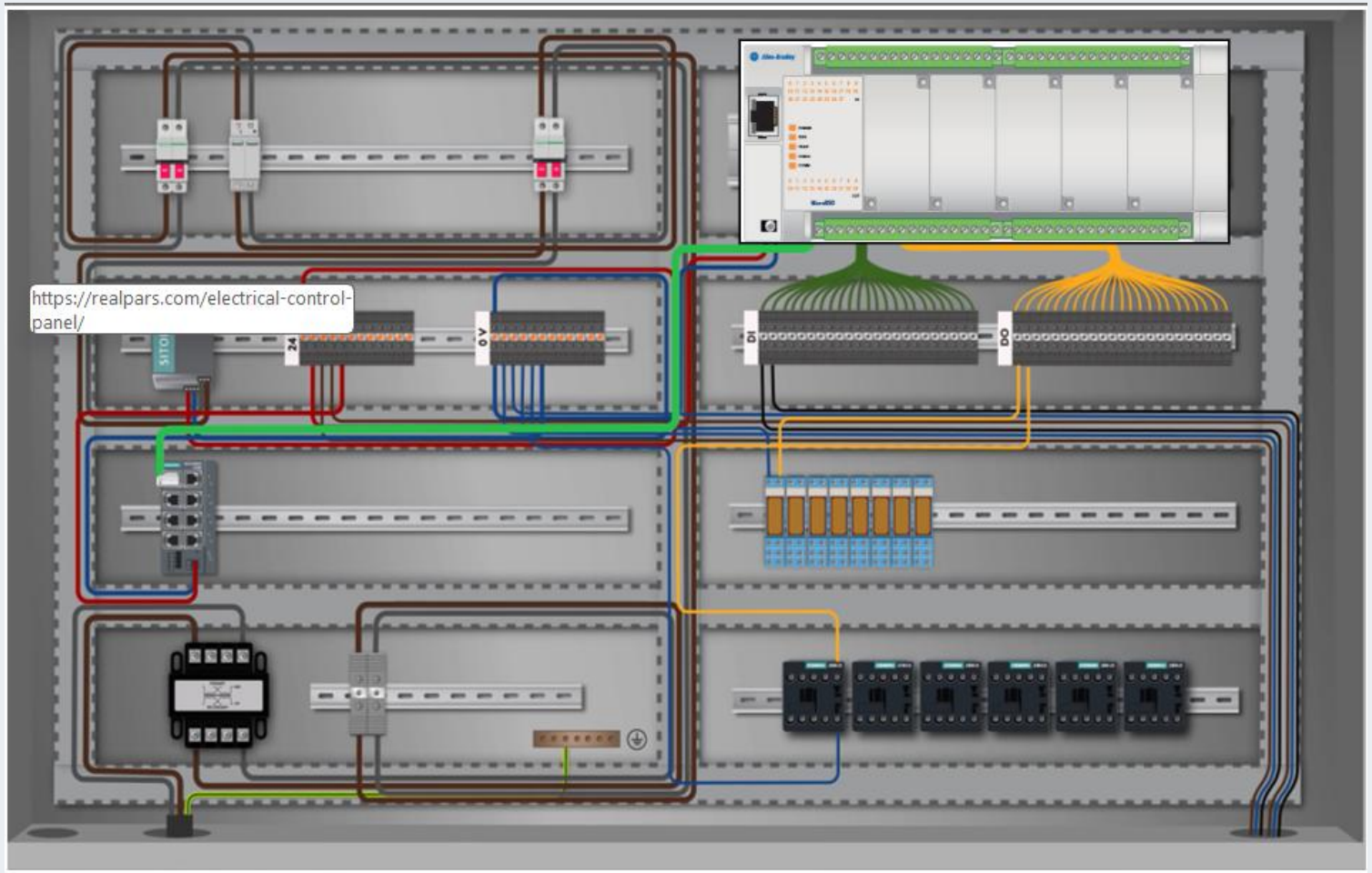

History of PLC’s

A programmable Logic Controller (PLC) is an Electronic device that controls machines and processes. It uses an electronic memory to store logic and instructions and execute specific functions to operate a machine’s sequence of operations.

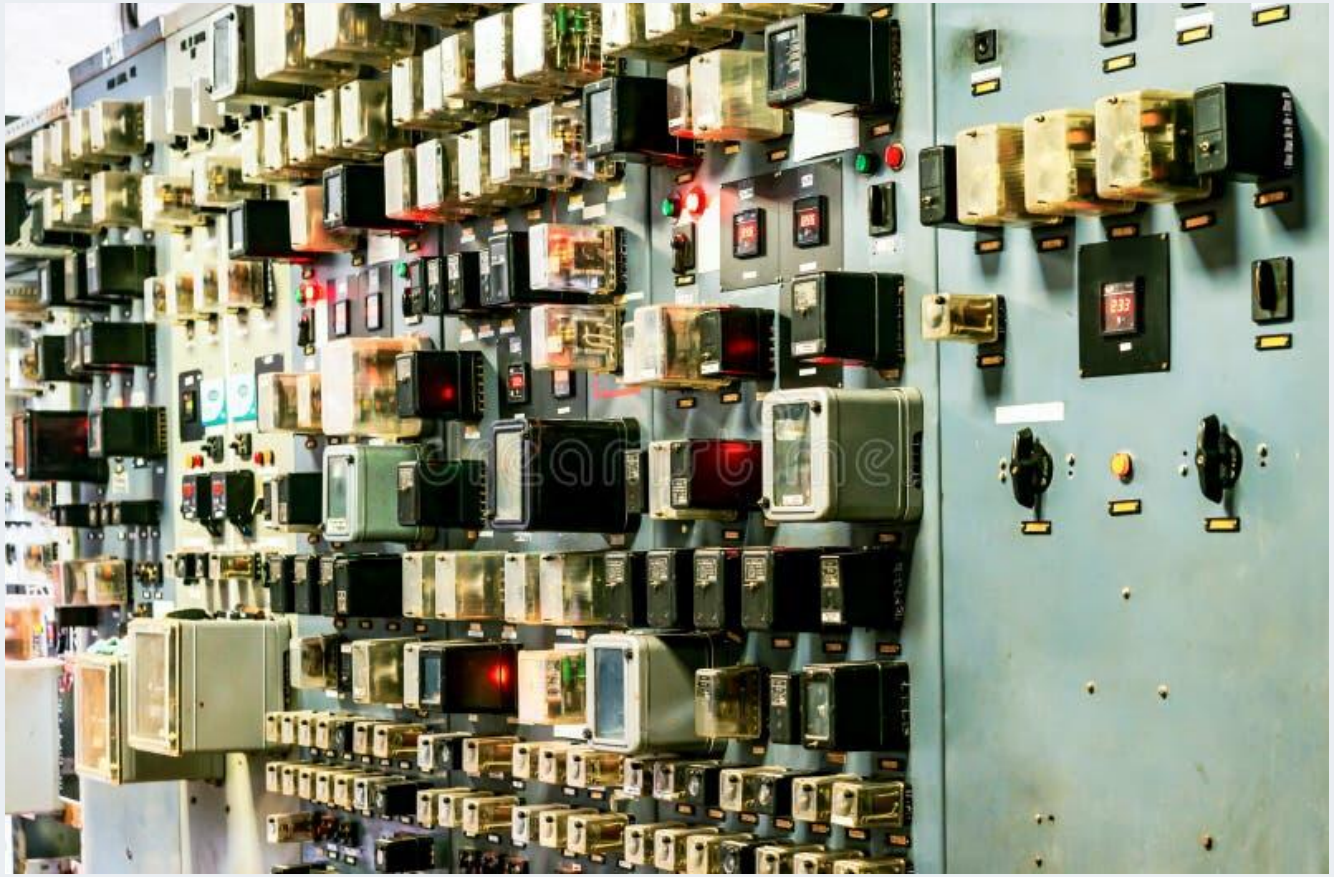

History of PLC’s

- The first PLC was created by Dick Morley in 1969 (Modicon 084).
- Although it had all of the required features it wasn’t commercially successful.
- In 1973 the company developed the Modicon 184 model which is described as the first PLC.
- An example of 1980 cars production line https://www.youtube.com/watch?v=BJ_y2GMrYSo



Introduction to Automation



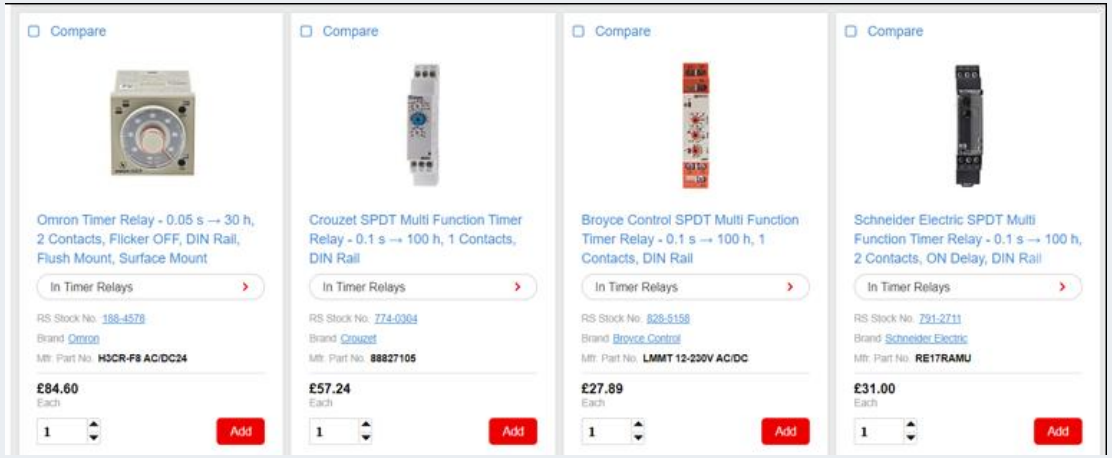

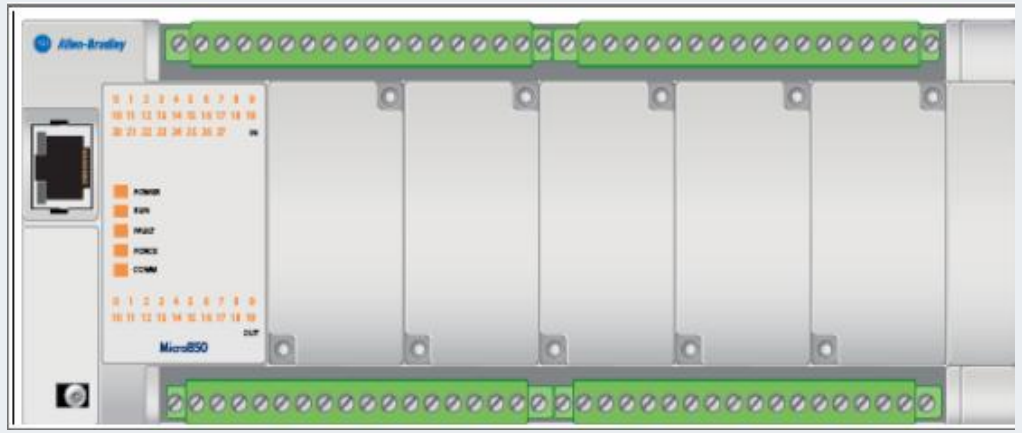

Introduction to Automation

Today's applications require a high level of control capability and advanced features

Rockwell Automation





- Arithmetic (Addition, Subtraction, Multiplication, Division, etc.)
- Data Comparison (Equal, Greater Than or Equal, Less Than or Equal)
- Word Manipulation (Copy, Move, etc.)
- Communications or Messaging data between PLC's

- Sequencing
- Data Manipulation



- Motion and Process Control (Used for Temperature, Pressure, Speed, Flow regulation)





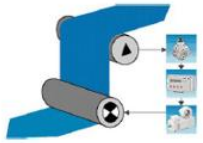

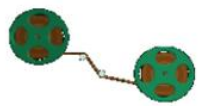

Introduction to Automation

Two Types Of I/O (Inputs & Outputs)

Rockwell Automation

- **Digital**
  - Also called Discrete
  - Has two possible states
  - Represented by "1" or "0"
  - Electrically:
    - "0" is usually 0 Volts (AC or DC)
    - "1" is a fixed voltage value such as 5VDC, 24VDC, 120VAC, etc.
  - Technology: Relays, Triac, Transistor, MOSFET, TTL



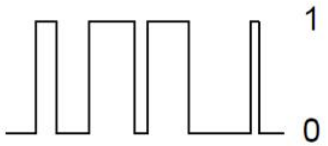

- **Analog**
  - Has many possible states between two values
  - Example: Temperature sensor
  - Range of values between two limits. For example:
    - 0°F represented by "0"
    - 100°F represented by "4095" (example)
  - Electrically: 4-20mA, 0-5VDC, -10 to 10VDC



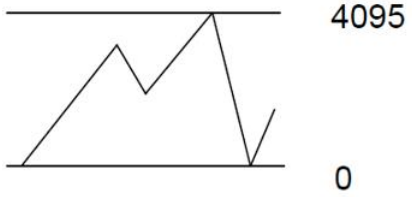

Programming languages

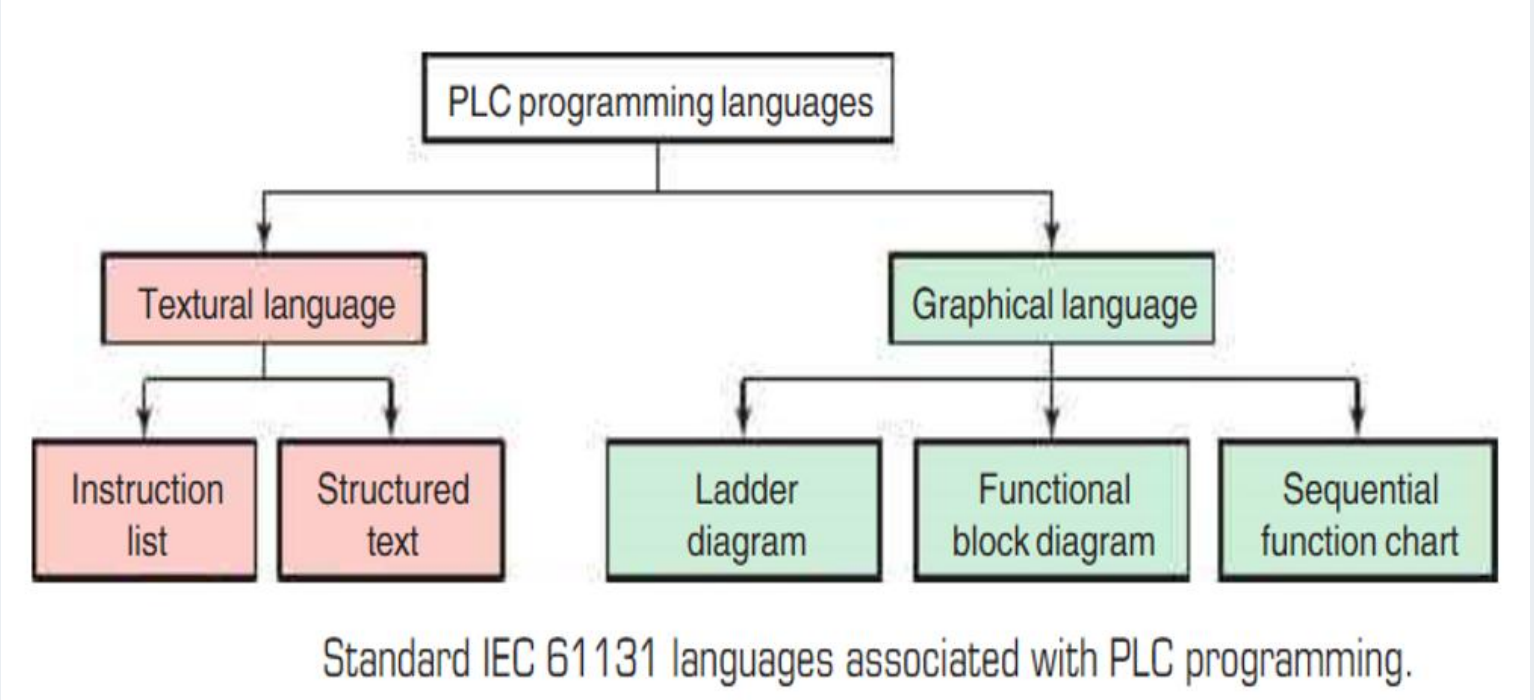

Standard IEC 61131 languages associated with PLC programming.

Basic Automation

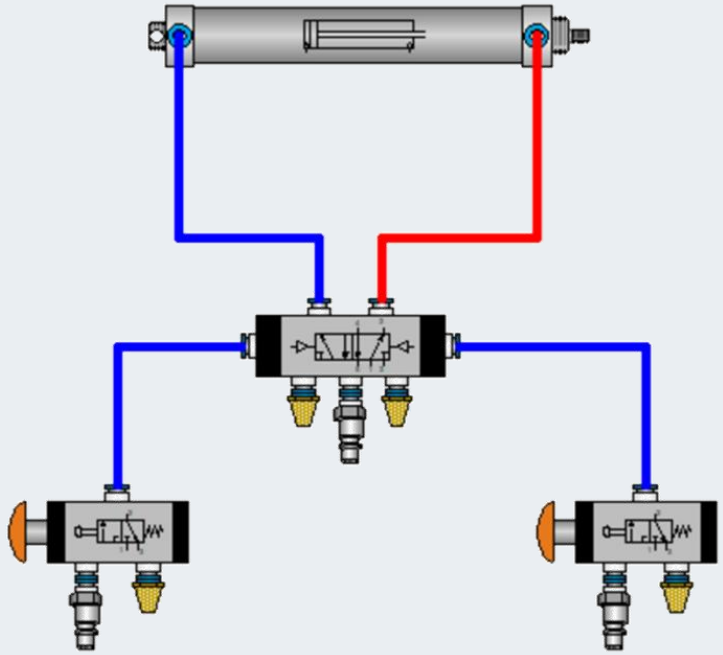

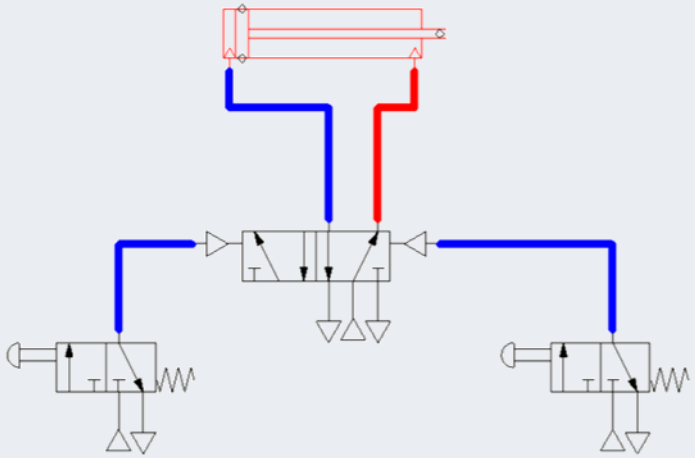

A touch of Automation

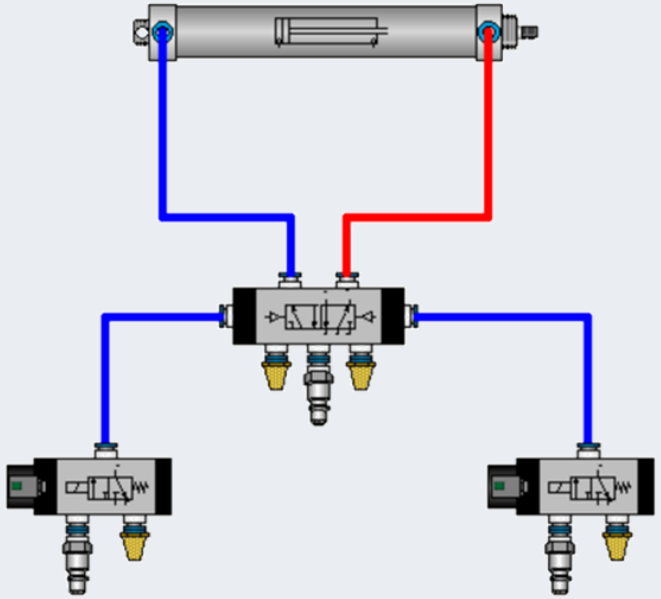

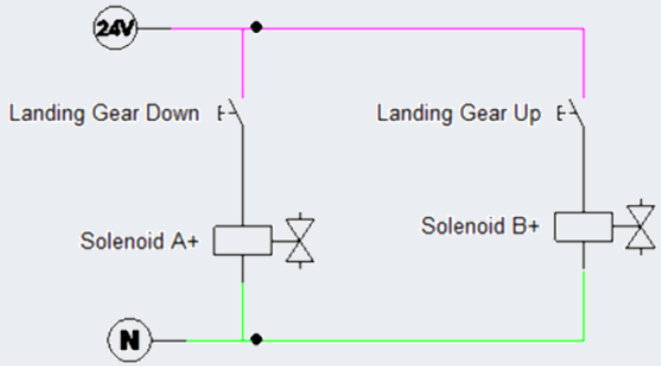

A little bit extra

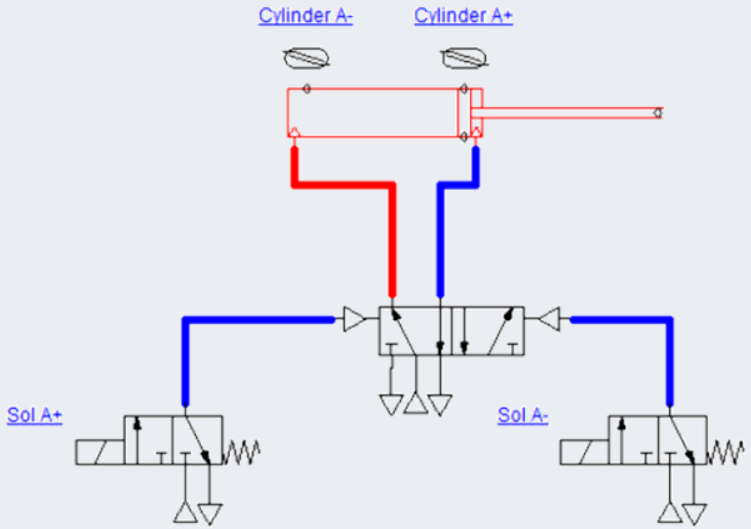

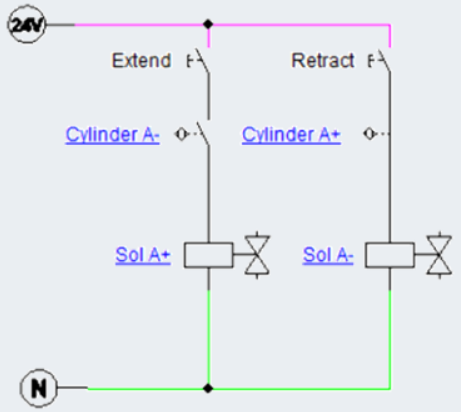

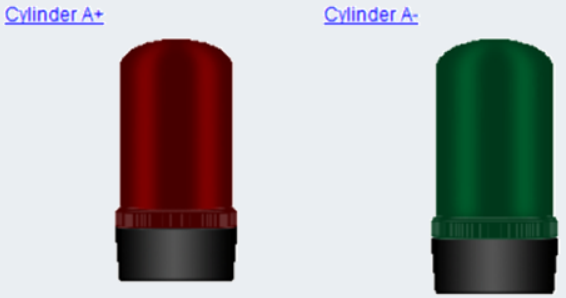

More Automation

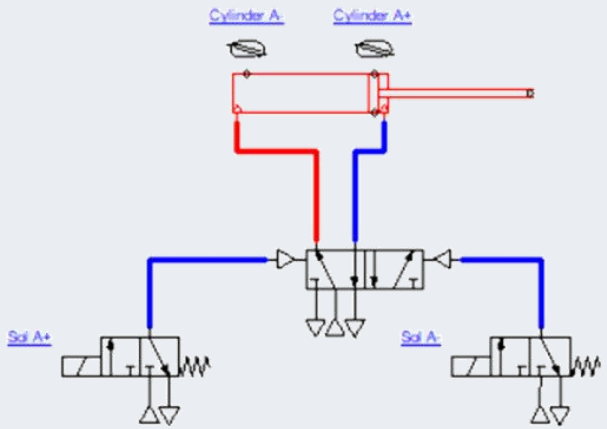

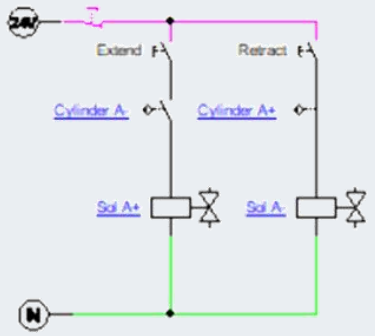



Automation circuit

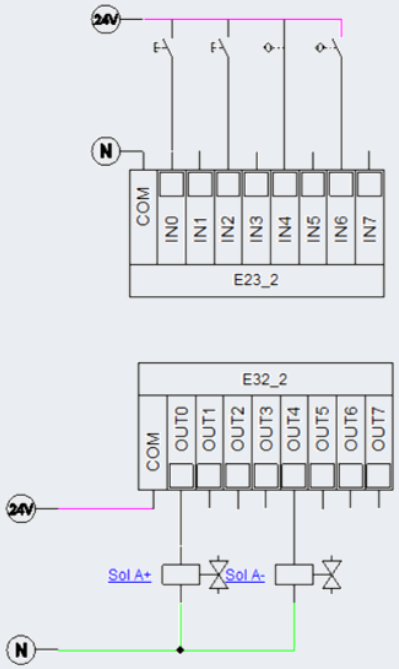

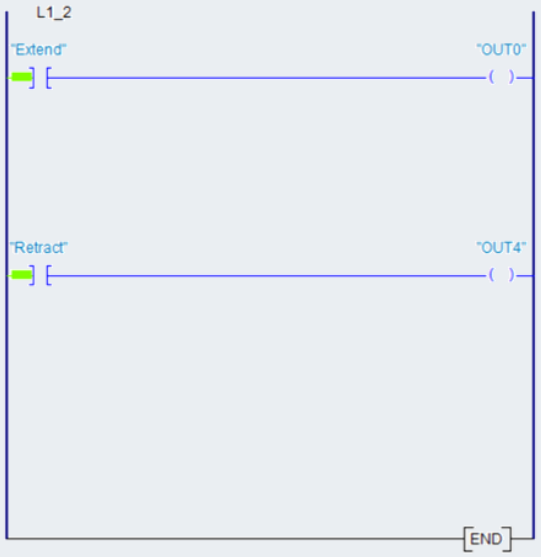

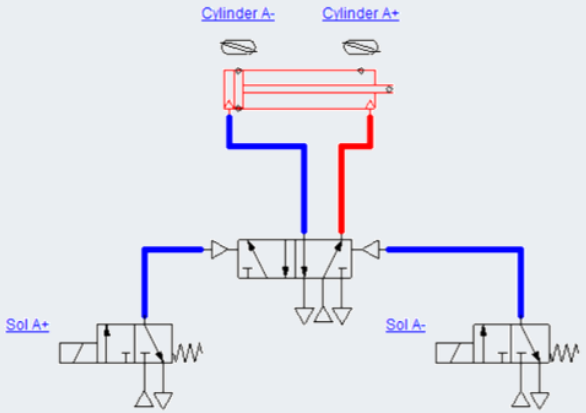

Automation circuit

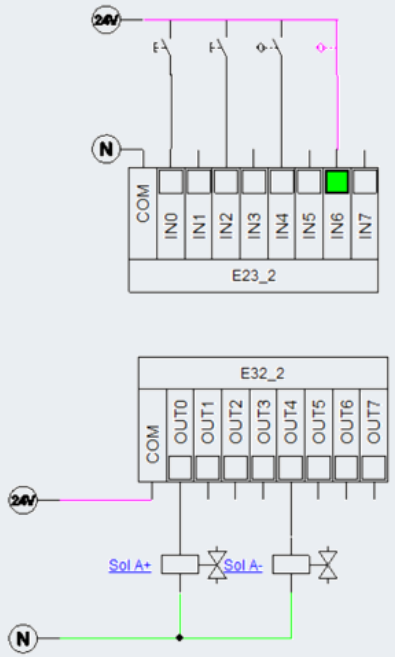

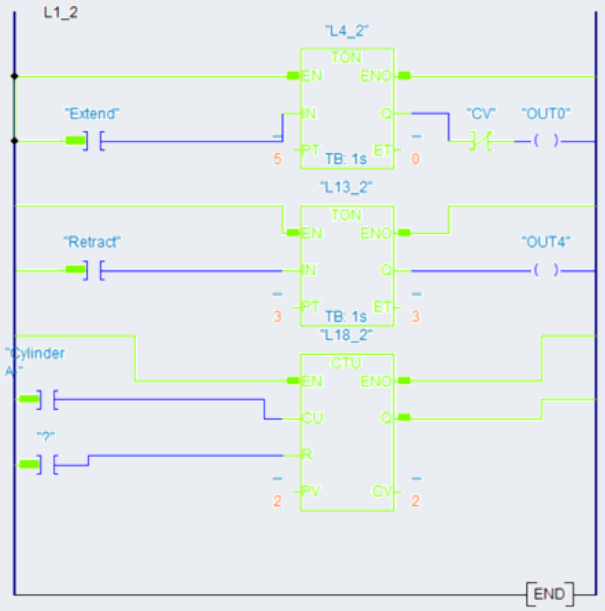

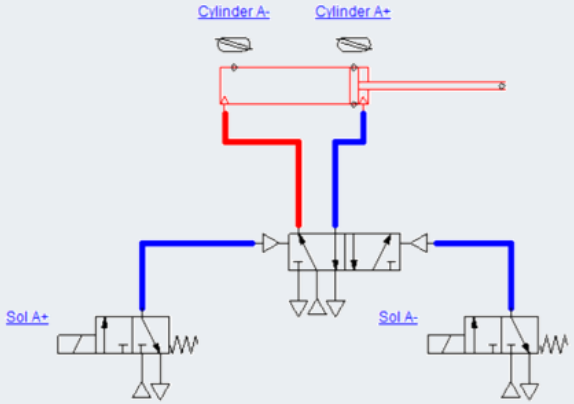

5-Layer Model of Automation Hierarchy

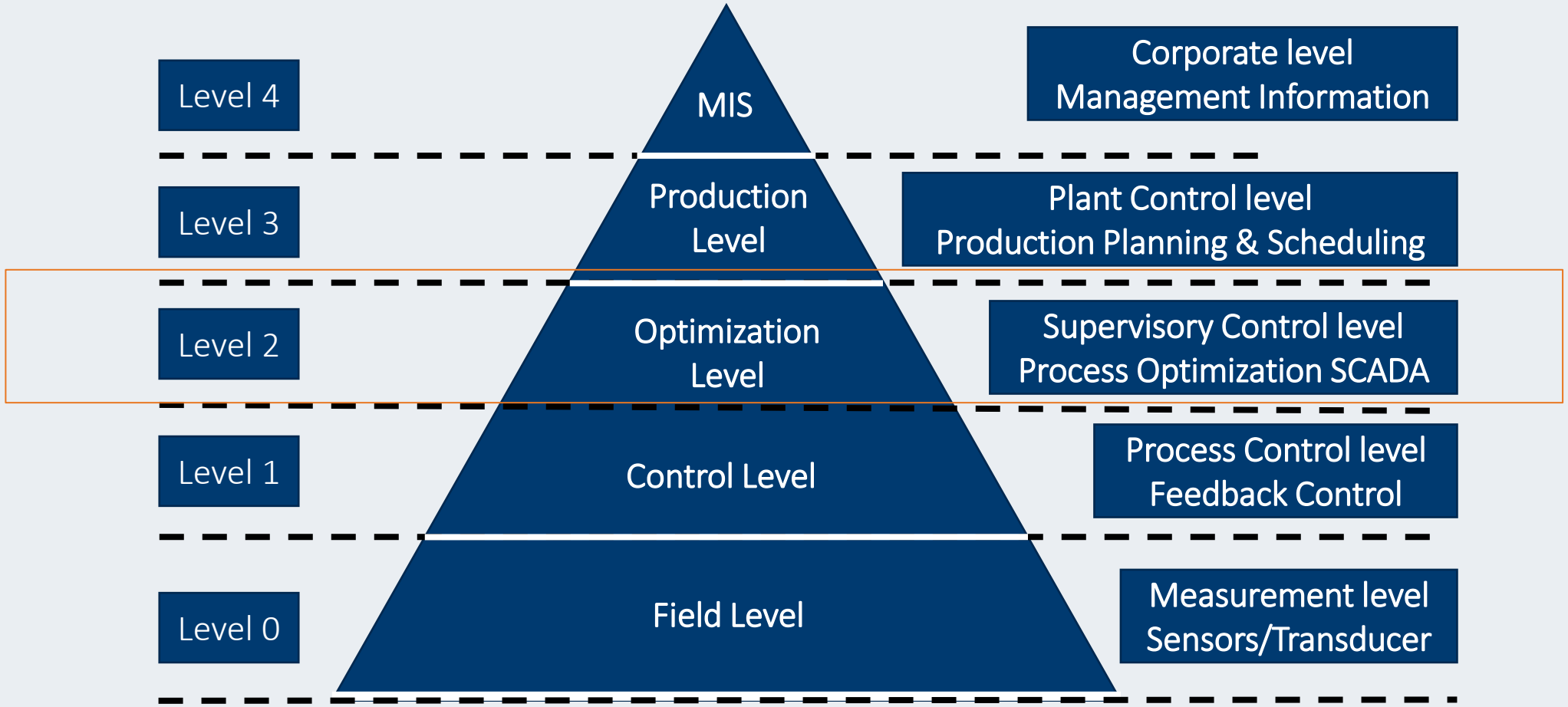

Demo time

Now we will use Codesys software to show how to build a simple Automation system

Thank You!

UKPRN: 10089771

Upcoming Programmes

Engineering College of Technology (ECT) *UK-Recognised Qualifications*	Start Date
Bachelor of Engineering (Honours) in Industrial Automation	February 2027
Bachelor of Engineering (Honours) in Electrical Engineering	February 2027
Master of Science (Power System Analysis and Renewable Integration)	February 2027
Master of Science (Industrial Automation and Instrumentation Control)	February 2027

Professional Certificates

Looking to upskill further? Check out the Professional Certificates!

These **3-month, non-accredited Professional Certificates of Competency**, delivered by ECT's affiliated institute, EIT, are designed by industry leaders and academics for technicians, technologists, engineers, and engineering professionals seeking to advance their expertise in a specific area. Featuring live, interactive webinars led by expert instructors with technical know-how, along with dedicated learning support, these courses are the perfect complement to an existing degree, qualification, or relevant work experience.

Find out more!

Contact Us:

Website
www.ect.ac.uk

Courses
https://www.ect.ac.uk/programmes/

Head Office
Whittle Way, Stevenage SG1 2FS,
United Kingdom

Phone
Inside UK: 0203 582 1389
Outside UK: +44 203 582 1389

UKPRN: 10089771